Hydroponic Tower (Legacy): Installation Manual

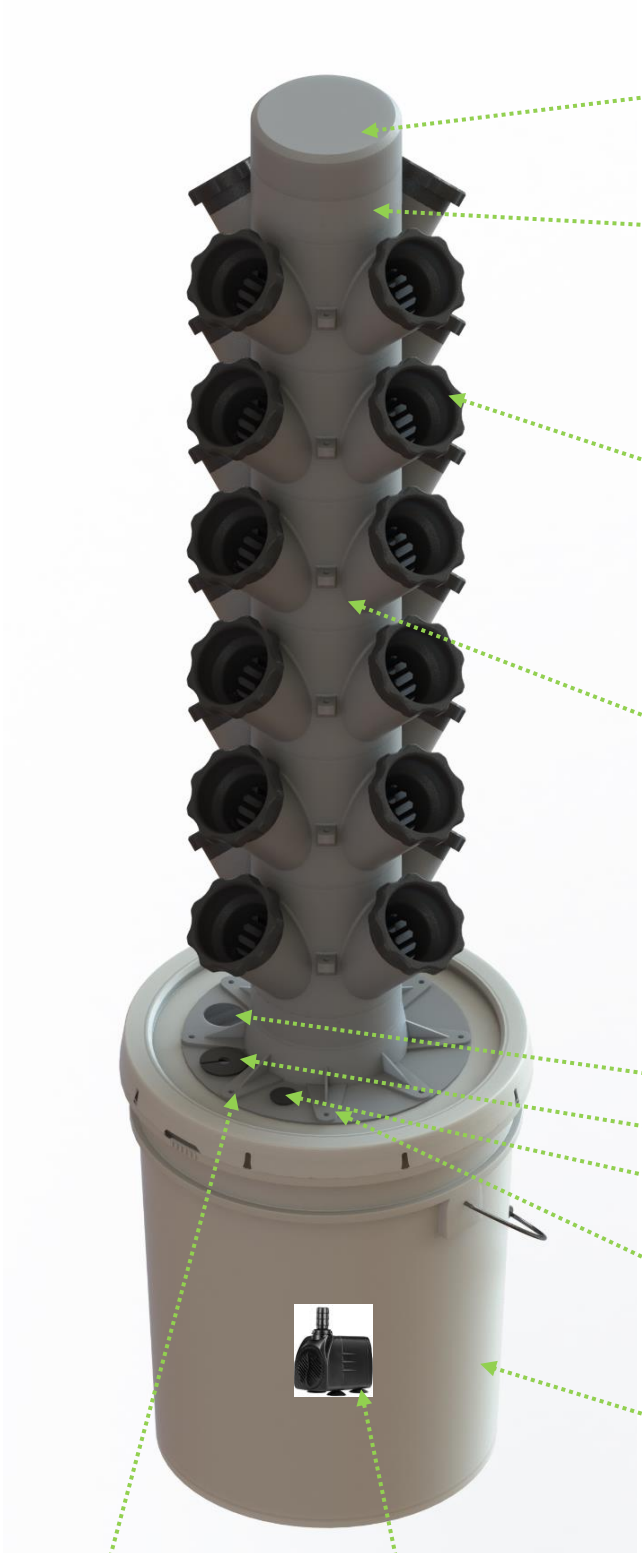

Before You Start

In the box (depends on the options you ordered)

- Base module kit: base module, 8 M4 bolts and nuts, plugs for the pump cable, liquid nutrients and float valve
- 3, 4 or 5-way tower sections
- Tower water spreader and tower lid
- Clear tube
- Growing pots
- Water pump (if you chose an option with the pump)
- Light holding kit (optional)

You will also need (not included)

- A 5-gallon bucket with lid, used as the water reservoir
- Growing medium (peat plugs or rockwool cubes) and seeds or seedlings
- Hydroponic nutrient solution
- A water pump, if your order does not include one
- A cycle timer or smart Wi-Fi plug that can run the pump for a few minutes at a time
- LED grow lights, 2 or 4 ft (optional, for indoor growing)

Tools

- Marker or pencil
- Drill with an 11/64" (4.5 mm) bit
- Hole saws or a step drill for 3" (76 mm), 1.3" (33 mm) and 0.67" (17 mm) openings
- Screwdriver and wrench for the M4 bolts
- Utility knife or file to smooth the cut edges

Safety first

- Plug the pump into a GFCI (ground fault) protected outlet, and keep plugs and outlets away from water.
- Always unplug the pump before putting your hands in the reservoir.
- Wear safety glasses when drilling and cutting the lid.

Step 1: Cutting the Openings in the Bucket Lid

1. Place the base module on the 5-gallon bucket lid where you want the tower.
2. Trace the outlines of openings n.1 to n.4 and mark the screw holes n.5 with a marker or pencil.
3. Using the base module as a template, drill the screw holes n.5 with an 11/64" (4.5 mm) drill bit.
4. Remove the base module and cut openings n.1 to n.4 along your marks. They can be slightly larger if needed; see the diameters below. Openings n.3 and n.4 are the same size.

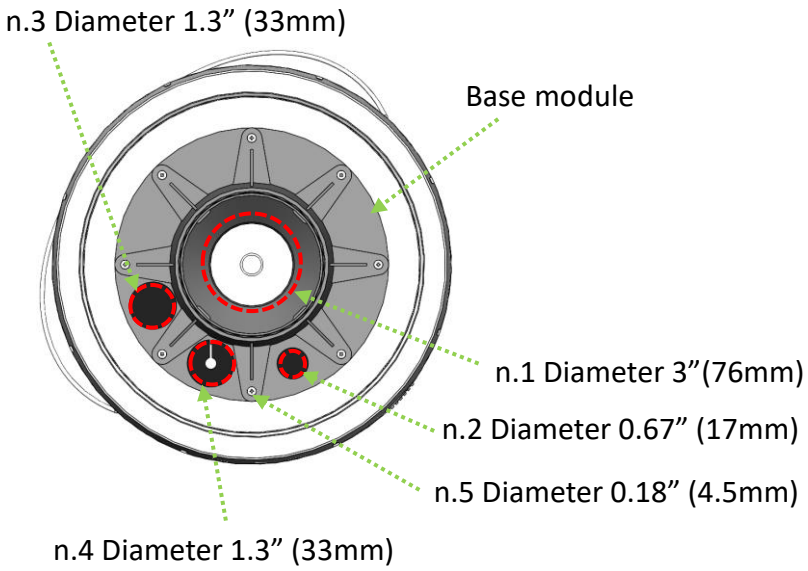

- n.1: Main drain opening
- n.2: Port for an optional float valve (automatic water top-up)
- n.3: Pump power cable
- n.4: Liquid nutrients
- n.5: Screw holes

Step 2: Installing the Base Module

Fix the base module to the lid with the 8 M4 bolts and nuts provided. Tighten them evenly, but do not overtighten.

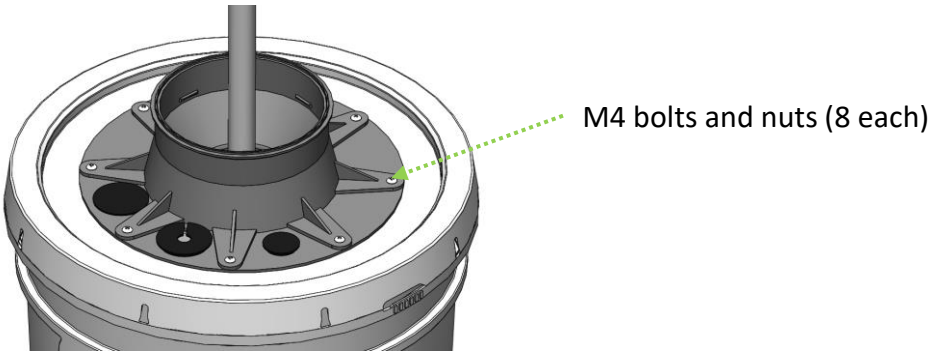

Step 3: Installing the Pump

1. If the pump cable is not pre-installed, pass it through the pump cable plug (push the edges as shown to open the slot).
2. Push the clear tube onto the pump outlet barb. Soften the tube with hot water or a hair dryer if needed.
3. We supply the tube a little long. If the pump turns or does not sit flat, cut the tube shorter until the pump stays in place on the bottom.
4. Place the pump on the bottom of the bucket and close the lid. Follow the pump maker's instructions and safety precautions.

We do not put a clamp on the pump barb: the tube holds the pressure, and you can pull it off easily when you open the reservoir.

Always unplug the pump before cleaning or putting your hands in the reservoir.

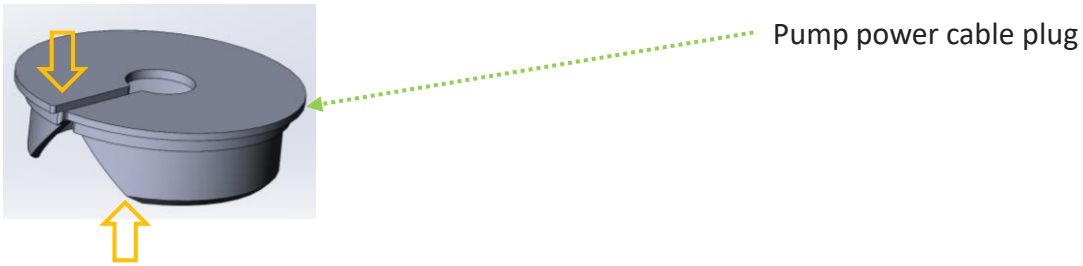

Push the edges as shown to open
the slot, then pass the cable through

Step 4: Assembling the Tower (Rotate and Click)

1. Attach the clear tube to the water spreader and place the spreader in the top section, with the tube passing down through it.
2. Slide the next section over the clear tube, push it on and turn it until it clicks into place. Repeat for each section.
3. Stand the tower on the base module and turn it until it clicks.
4. Place the tower lid on the top section and turn it until it clicks.

To take the tower apart, turn each part back the other way and lift it off.

Step 5: Installing the Light Holding Kit (Optional)

1. Gently push each light arm into its slot on the light holding cap, one at a time.
2. Place the kit on the tower lid, line up the lips with the slots, and lower it.
3. Turn the light holder until the lights are where you want them.

To remove the light holder: turn it while gently lifting until the lips line up with the slots again, then lift it off.

To remove an arm: push it out of the holder with a narrow tool such as a screwdriver. Do not pull on the arm itself; it could break.

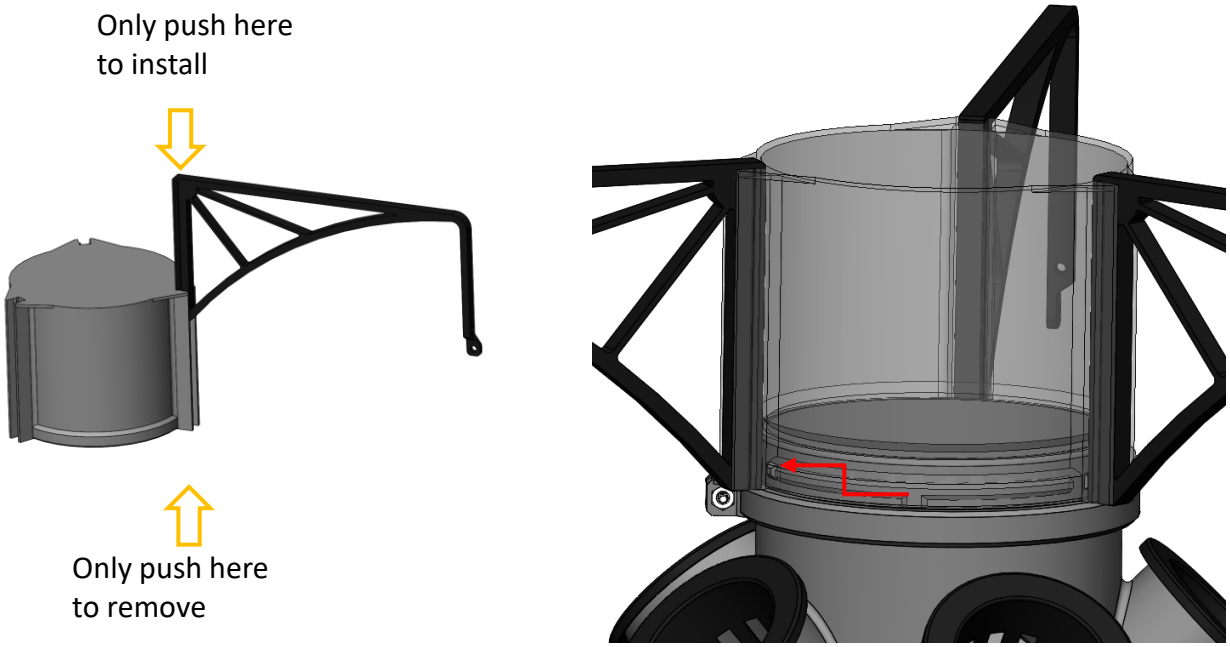

Step 6: Installing the Lights (Optional)

1. Fix the light's metal bracket (usually supplied with the light) to the light holding arm with the bolt and nut provided.
2. Mount the light on the bracket. Repeat for the other lights.
3. Connect the cables as described in the light maker's instructions.

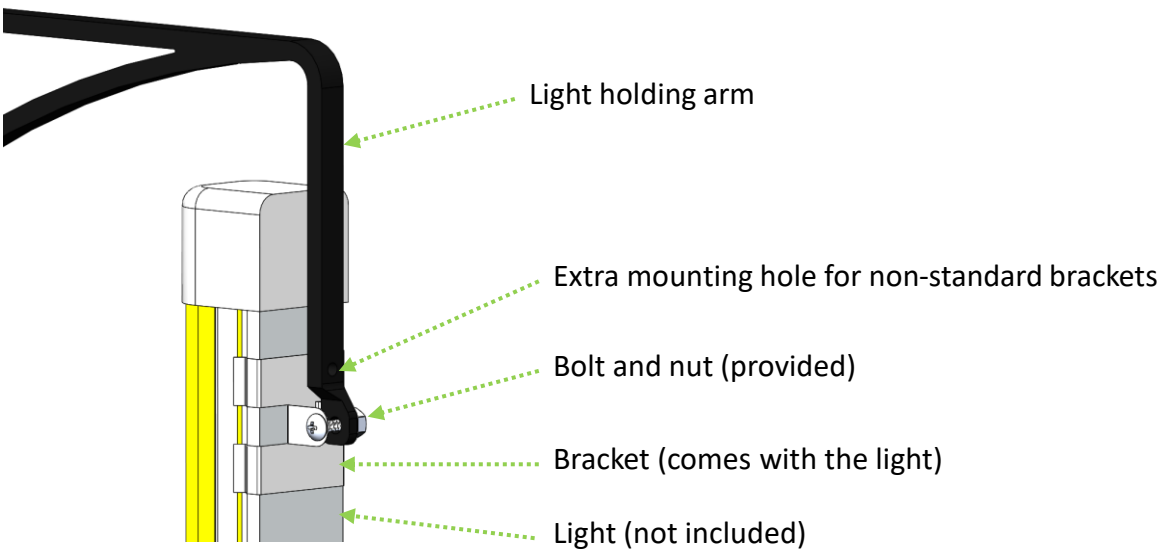

Step 7: Planting and Starting the Tower

1. Start seeds in peat plugs or rockwool cubes.
2. Put the plugs or seedlings into the growing pots.
3. Place the growing pots in the openings of the tower sections.
4. Fill the bucket about 3/4 full of water. The pump must always be under water.
5. Add hydroponic nutrients as directed by their maker (not included).
6. Plug the pump into a cycle timer or smart Wi-Fi plug (not included). See the timer settings on the next page.
7. Switch on and check that every section gets water and nothing leaks.

Care and Safety

1. Cleaning

- Wash all tower parts by hand. Do not use a dishwasher or boiling water; heat can warp the plastic.
- Rinse well so no cleaning product is left before you reassemble.

2. Electrical safety

- Always unplug the pump and lights before maintenance or cleaning.
- Check cords and plugs regularly and replace them if damaged.

3. Lighting

- Most grow lights are for indoor use only. Check the light's manual before using it outdoors.
- Keep lights away from water; any outdoor light must be rated for damp locations.

4. Pump and water

- Never run the pump dry: the pump must be under water at all times.
- Keep the bucket about 3/4 full. Without a float valve, check the water level every day.
- Check the pump intake and the water spreader holes for clogs to prevent overflow or leaks.

5. Nutrient solution and roots

- Every 1 to 2 weeks, drain the old solution, clean the reservoir and refill with fresh solution.
- Check pH (ideal 5.5 to 6.5) and EC/TDS (depends on the plant) at least twice a week.
- Trim large root masses so they do not block the water flow.

6. Location

- Set the tower on a level surface; a tilted tower waters unevenly and can tip over.
- Keep it where the temperature suits your plants (usually 18 to 27 °C / 65 to 80 °F), with good air flow to prevent mold.

7. Good habits

- Use hydroponic nutrients only, at the dose on the label; too much can burn roots and clog the spreader.
- Keep a simple log: date, pH, EC/TDS, solution changes, root trims and any problems.
- Once a month, check the tubing, gaskets, clamps and fittings for wear, and replace parts early.

Pump timer settings (starting points)

Where the tower is	Day / lights on	Night / lights off
Indoors, under grow lights	10 min on every hour	10 min every 4 to 6 hours
Outdoors, mild or cloudy	15 min on every hour	10 min every 4 hours
Outdoors, hot sun (above about 27 °C / 80 °F)	15 min on every 30 min	10 min every 2 to 3 hours
Seedlings and new plugs (first 2 weeks)	10 min on every 30 min	10 min every 4 hours

The growing medium must stay moist at all times. If it dries out between cycles, run the pump more often or longer; if it stays soaked or water drips from the openings, run it less. In full sun and heat, plants need much more water.

Use a timer that can switch on for a few minutes at a time, such as a cycle timer or a smart plug with schedules.

Troubleshooting

Water leaks between sections
Check that each section is pushed fully onto the one below and turned until it clicks (Step 4).

Water splashes out of the openings, or the growing medium stays soaked
The flow is too strong. Turn down the pump's flow regulator.

Some sections get little or no water
Make sure the tower is level and the water spreader is in place. Clean the spreader holes.

The growing medium dries out between cycles
Run the pump more often or longer (see the timer table above). In hot sun, plants need much more water.

The pump runs, but no water reaches the top
Check the water level and that the tube is still on the pump barb. Clean the pump intake.

Green algae in the reservoir or tube
Keep the reservoir closed and out of direct light, and close unused openings with their plugs.

Limitation of Liability

Under no circumstances shall InnovoMAX be liable for indirect, incidental or consequential damages arising from the use of, or inability to use, this product.

Compliance and Permits

You are responsible for following local electrical, building and water-use codes, and for getting any permits needed before installation.

Enjoy your garden!

You can upgrade your tower at any time with:

- An automatic float valve to top up the water
- Grow lights and the light holding kit
- More sections to grow more in the same space

Questions, ideas or problems? Write to us at info@innovomax.com

We keep improving our products. Before you install the tower, scan the code to check you have the latest manual: