Self-Watering Hydroponic Tower: Installation Manual

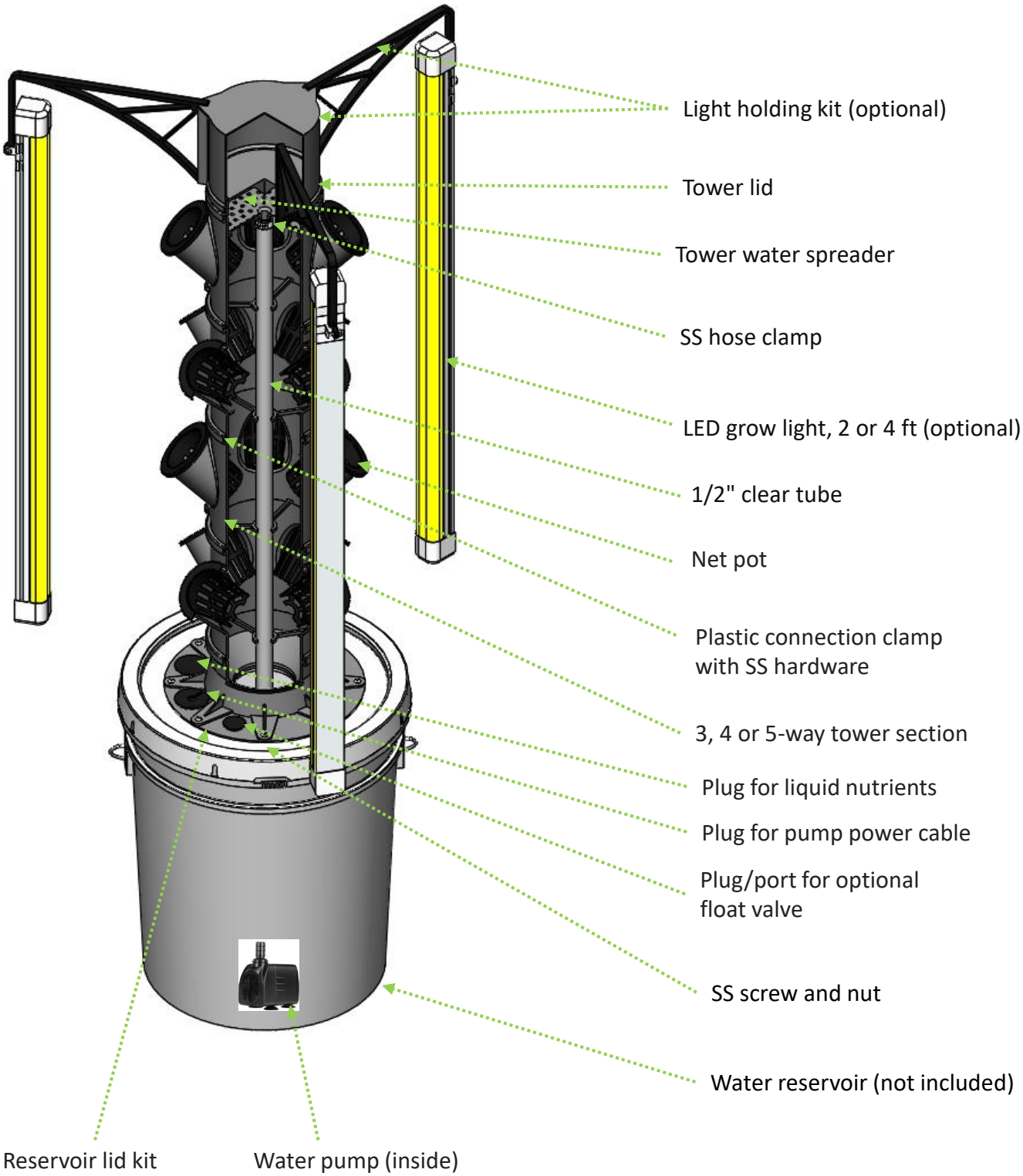

Before You Start

In the box (depends on the options you ordered)

- Base module kit: base module, 8 M4 bolts and nuts, plugs for the pump cable, liquid nutrients and float valve
- 3, 4 or 5-way tower sections, with plastic connection clamps and stainless steel (SS) hardware
- Tower water spreader, 1/2" clear tube and SS hose clamp
- Tower lid
- Net pots
- Water pump (if you chose an option with the pump)
- Orifice insert (optional)
- Light holding kit (optional)

You will also need (not included)

- A 5-gallon bucket with lid, used as the water reservoir
- Growing medium (peat plugs or rockwool cubes) and seeds or seedlings
- Hydroponic nutrient solution
- A water pump, if your order does not include one
- A cycle timer or smart Wi-Fi plug that can run the pump for a few minutes at a time
- LED grow lights, 2 or 4 ft (optional, for indoor growing)

Tools

- Marker or pencil
- Drill with an 11/64" (4.5 mm) bit
- Hole saws or a step drill for 3" (76 mm), 1.3" (33 mm) and 0.67" (17 mm) openings
- Screwdriver and wrench for the M4 bolts
- Utility knife or file to smooth the cut edges

Safety first

- Plug the pump into a GFCI (ground fault) protected outlet, and keep plugs and outlets away from water.
- Always unplug the pump before putting your hands in the reservoir.
- Wear safety glasses when drilling and cutting the lid.

Step 1: Cutting the Openings in the Bucket Lid

1.Place the base module on the 5-gallon bucket lid where you want the tower.
2.Trace the outlines of openings n.1 to n.4 and mark the screw holes n.5 with a marker or pencil.
3.Using the base module as a template, drill the screw holes n.5 with an 11/64" (4.5 mm) drill bit.
4.Remove the base module and cut openings n.1 to n.4 along your marks. They can be slightly larger if needed; see the diameters below. Openings n.3 and n.4 are the same size.

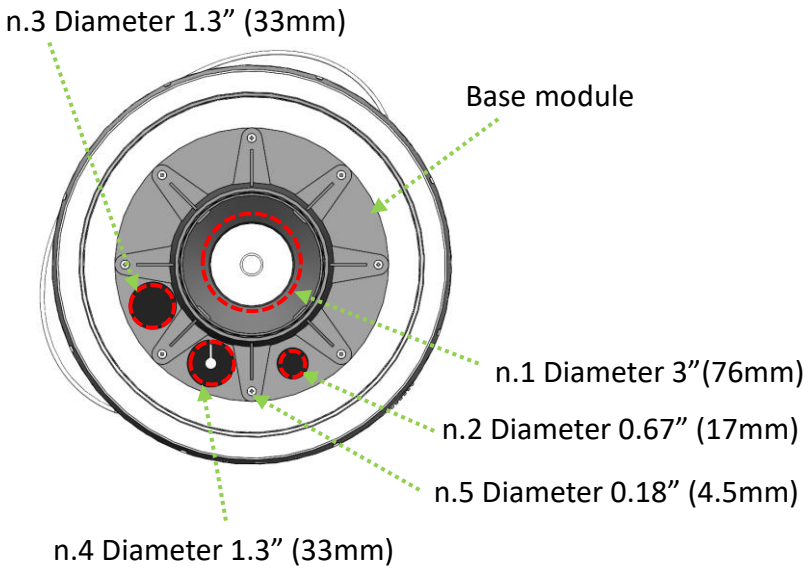

- n.1: Main drain opening
- n.2: Port for an optional float valve (automatic water top-up)
- n.3: Pump power cable
- n.4: Liquid nutrients
- n.5: Screw holes

Step 2: Installing the Base Module

Fix the base module to the lid with the 8 M4 bolts and nuts provided. Tighten them evenly, but do not overtighten.

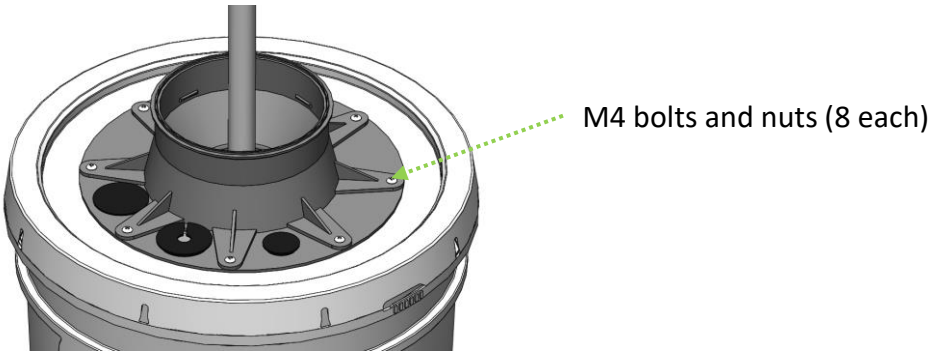

Step 3: Attaching the Clear Tube to the Water Spreader (if not pre-assembled)

1.Loosen the stainless steel (SS) hose clamp and slide it onto the tube.

2.Push the clear tube onto the barbed end of the water spreader. Tip: dip the tube end in hot water or warm it with a hair dryer for a few seconds to soften it.

3.Slide the SS clamp over the barb and tighten it.

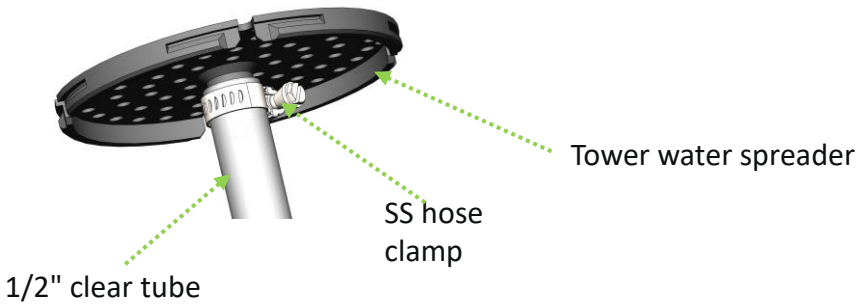

Step 4: Installing the Tower Water Spreader

1.Pass the clear tube down through the top tower section, then lower the water spreader into the section.

2.Line up the cutouts on the water spreader with the support lips inside the section, so it drops into the slots.

3.Turn the water spreader about 10° until you feel resistance. It is now locked in place.

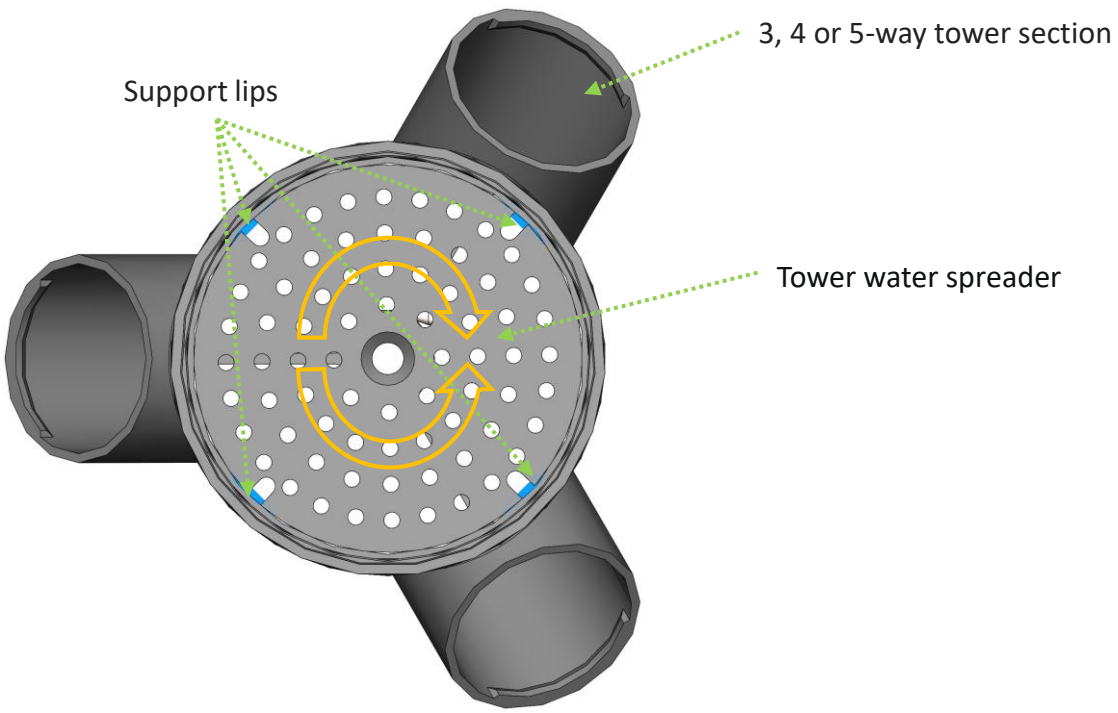

Step 5: Installing the Growing Sections

1. Lay the top section on its side. Slide the next section over the clear tube and push it on. Repeat for each section.
2. Secure each joint with a plastic connection clamp.
3. To turn a section, loosen the clamp screw, turn it, then tighten again.
4. Stand the tower up on the base module and secure it with a plastic connection clamp, the same way as between sections.

Important: do not overtighten. Leave a gap of about 1 mm in the clamp so the plastic does not crack.

Plastic connection clamp with SS hardware

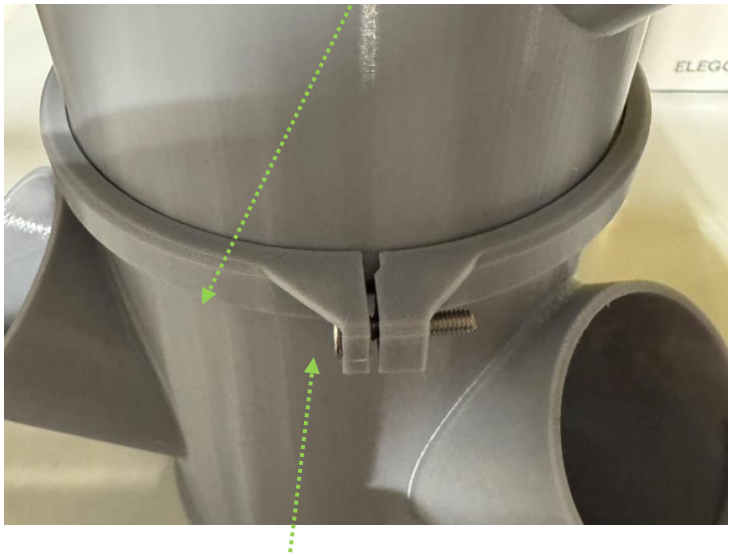

Leave a gap of about 1 mm in the clamp!

Step 6: Installing the Pump

1.If the pump cable is not pre-installed, pass it through the pump cable plug (push the edges as shown to open the slot).
2.Push the clear tube onto the pump outlet barb. Soften the tube with hot water or a hair dryer if needed.
3.We supply the tube a little long. If the pump turns or does not sit flat, cut the tube shorter until the pump stays in place on the bottom.
4.Place the pump on the bottom of the bucket and close the lid. Follow the pump maker's instructions and safety precautions.
5.We do not put a clamp on the pump barb: the tube holds the pressure, and you can pull it off easily when you open the reservoir.
6.Always unplug the pump before cleaning or putting your hands in the reservoir.

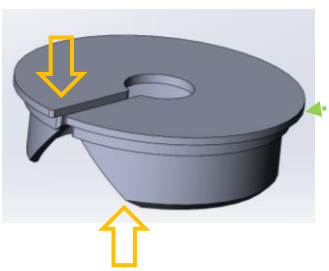

Pump power cable plug

Push the edges as shown to open the slot, then pass the cable through

Step 7: Installing the Tower Lid

1.Place the tower lid on the top section.
2.Secure it with a plastic connection clamp.

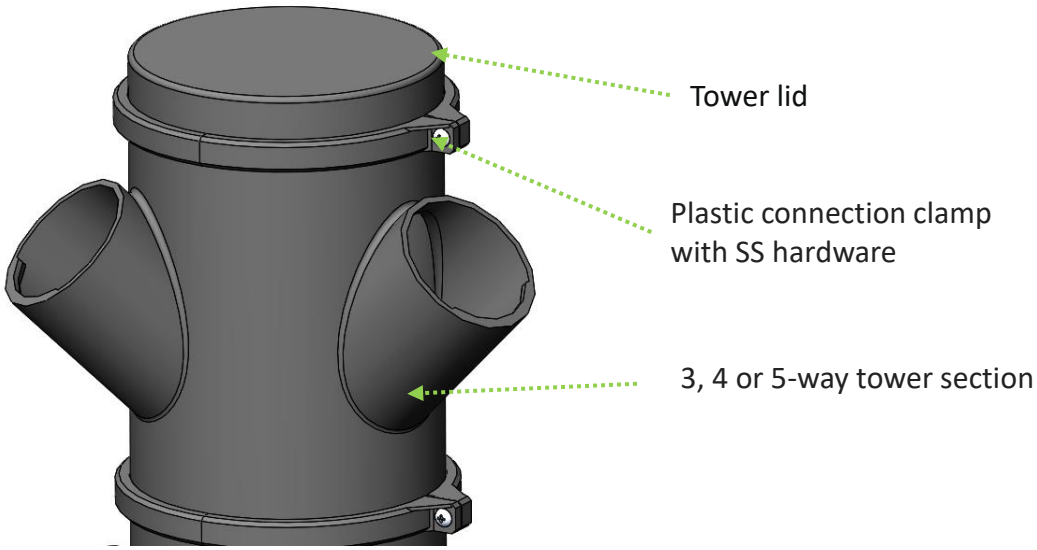

Step 8: Planting and Starting the Tower

1.Start seeds in peat plugs or rockwool cubes.
2.Put the plugs or seedlings into the net pots.
3.Place the net pots in the openings of the tower sections.
4.Fill the bucket about 3/4 full of water. The pump must always be under water.
5.Add hydroponic nutrients as directed by their maker (not included).
6.Plug the pump into a cycle timer or smart Wi-Fi plug (not included) and set it as shown below.
7.Switch on and check that every section gets water and nothing leaks.

Pump timer settings (starting points)

Where the tower is	Day / lights on	Night / lights off
Indoors, under grow lights	10 min on every hour	10 min every 4 to 6 hours
Outdoors, mild or cloudy	15 min on every hour	10 min every 4 hours
Outdoors, hot sun (above about 27 °C / 80 °F)	15 min on every 30 min	10 min every 2 to 3 hours
Seedlings and new plugs (first 2 weeks)	10 min on every 30 min	10 min every 4 hours

The growing medium must stay moist at all times. If it dries out between cycles, run the pump more often or longer; if it stays soaked or water drips from the openings, run it less. In full sun and heat, plants need much more water.

Use a timer that can switch on for a few minutes at a time, such as a cycle timer or a smart plug with schedules.

Step 9: Installing the Light Holding Kit (Optional)

1.Gently push each light arm into its slot on the light holding cap, one at a time.
2.Place the kit on the tower lid, line up the lips with the slots, and lower it.
3.Turn the light holder until the lights are where you want them.
To remove the light holder: turn it while gently lifting until the lips line up with the slots again, then lift it off.
To remove an arm: push it out of the holder with a narrow tool such as a screwdriver. Do not pull on the arm itself; it could break.

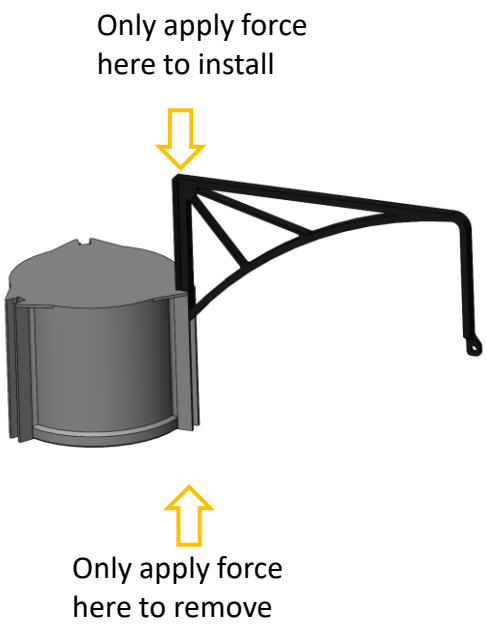

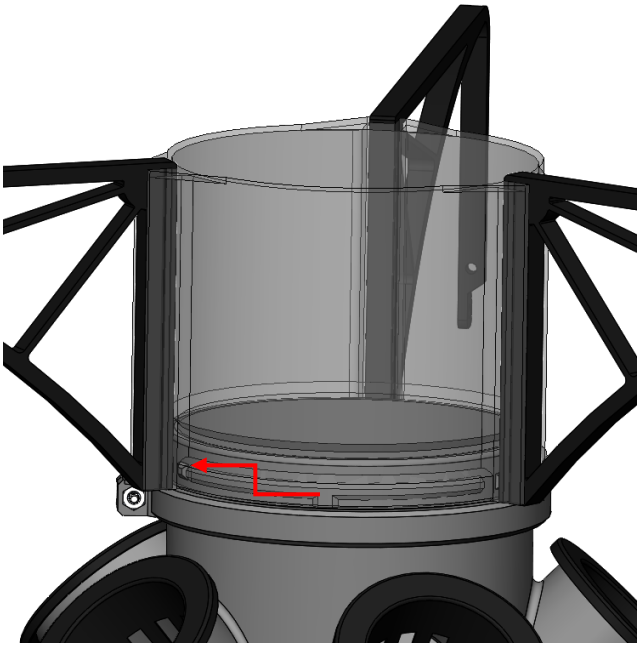

Step 10: Installing the Light (Optional)

1. Using the provided hardware, attach the metal bracket (typically included with the light) to the light holding arm.
2. Mount the light onto the bracket, then repeat the process for the remaining lights and brackets.
3. Complete the cable connections by following the instructions provided by the light supplier.

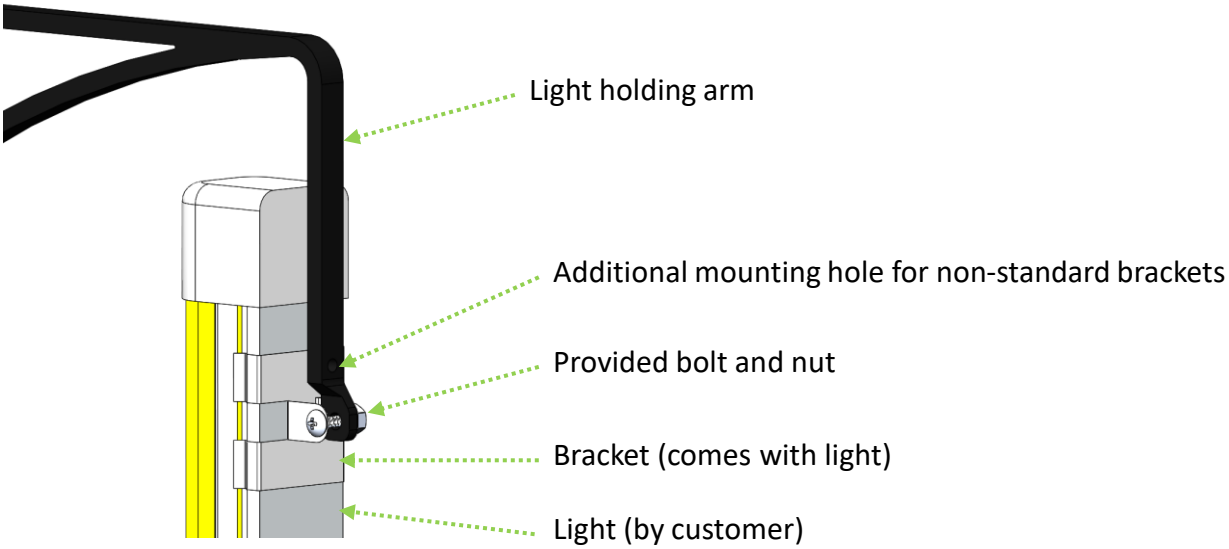

Step 11: Installing the Orifice Insert (Optional)

Use the orifice insert to choke the flow if it is too strong, for example on a short tower, when the growing medium stays soaked or water splashes out, and the pump's own flow regulator is not enough.

1. Unplug the pump.
2. Remove the tower lid.
3. Take out the water spreader and disconnect the clear tube.
4. Fit the orifice insert into the water spreader, reconnect the tube, and reinstall the water spreader and lid.

Care and Safety

1. Cleaning

- Wash all tower parts by hand. Do not use a dishwasher or boiling water; heat can warp the plastic.
- Rinse well so no cleaning product is left before you reassemble.

2. Electrical safety

- Always unplug the pump and lights before maintenance or cleaning.
- Check cords and plugs regularly and replace them if damaged.

3. Lighting

- Most grow lights are for indoor use only. Check the light's manual before using it outdoors.
- Keep lights away from water; any outdoor light must be rated for damp locations.

4. Pump and water

- Never run the pump dry: the pump must be under water at all times.
- Keep the bucket about 3/4 full. Without a float valve, check the water level every day.
- Check the pump intake and the water spreader holes for clogs to prevent overflow or leaks.

5. Nutrient solution and roots

- Every 1 to 2 weeks, drain the old solution, clean the reservoir and refill with fresh solution.
- Check pH (ideal 5.5 to 6.5) and EC/TDS (depends on the plant) at least twice a week.
- Trim large root masses so they do not block the water flow.

6. Location

- Set the tower on a level surface; a tilted tower waters unevenly and can tip over.
- Keep it where the temperature suits your plants (usually 18 to 27 °C / 65 to 80 °F), with good air flow to prevent mold.

7. Good habits

- Use hydroponic nutrients only, at the dose on the label; too much can burn roots and clog the spreader.
- Keep a simple log: date, pH, EC/TDS, solution changes, root trims and any problems.
- Once a month, check the tubing, clamps and fittings for wear, and replace parts early.

Troubleshooting

Water leaks between sections

Check that each section is pushed fully into the next and that every clamp is closed with about a 1 mm gap. Do not overtighten.

Water splashes out of the openings, or the growing medium stays soaked

The flow is too strong. Turn down the pump's flow regulator, or fit the orifice insert (Step 11).

Some sections get little or no water

Make sure the tower is level and the water spreader is locked in its slots (Step 4). Clean the spreader holes.

The growing medium dries out between cycles

Run the pump more often or longer (see the timer table in Step 8). In hot sun, plants need much more water.

The pump runs, but no water reaches the top

Check the water level and that the tube is still on the pump barb. Clean the pump intake.

The pump is noisy

The water level is too low or the intake is partly blocked. Top up the water and clean the intake.

Green algae in the reservoir or tube

Keep the reservoir closed and out of direct light, and close unused openings with their plugs. Clean the reservoir at each solution change.

A plastic clamp is cracked

It was tightened too much. Write to us at info@innovomax.com for a replacement.

Limitation of Liability

Under no circumstances shall InnovoMAX be liable for indirect, incidental or consequential damages arising from the use of, or inability to use, this product.

Compliance and Permits

You are responsible for following local electrical, building and water-use codes, and for getting any permits needed before installation.

Enjoy your garden!

You can upgrade your tower at any time with:
•An automatic float valve to top up the water
•Grow lights and the light holding kit
•More sections to grow more in the same space
Questions, ideas or problems? Write to us at info@innovomax.com

We keep improving our products. Before you install the tower, scan the code to check you have the latest manual: