Kitchen Counter Hydroponic Tower: Installation Manual



Before You Start

In the box (depends on the options you ordered)

- Water reservoir with cable channels and water level indicator
- 2-way and 3-way tower sections with ring gaskets
- Tower lid and water spreader
- Push-in connector for the 3/8" clear tube, with optional orifice insert
- 3/8" clear tube
- Net pots, and flexible algae covers (optional)
- Water pump

You will also need (not included)

- Growing medium (peat plugs or rockwool cubes) and seeds or seedlings
- Hydroponic nutrient solution
- A cycle timer or smart Wi-Fi plug that can run the pump for a few minutes at a time
- A bright spot or a grow light

No tools are needed.

Safety first

- Plug the pump into a GFCI (ground fault) protected outlet, and keep plugs and outlets away from water.
- Always unplug the pump before putting your hands in the reservoir.

Step 1: Installing the Pump

1. Push the clear tube onto the pump barb. If it is hard to push on, dip the tube end in hot water for a few seconds.
2. Pass the pump cable through one of the cable channels (there is one on each side of the reservoir).
3. Place the pump on the bottom of the reservoir.

Always unplug the pump before cleaning or putting your hands in the reservoir.



Step 2: Connecting the Tube to the Tower

1. Push the free end of the clear tube onto the push-in connector.
2. Wet the push-in connector a little and push it into its O-ring gasket.

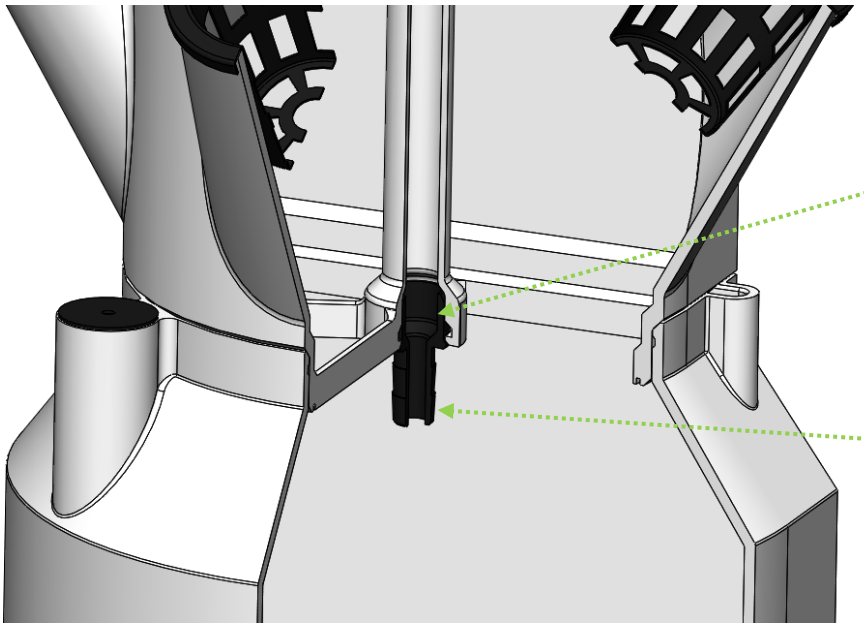

Step 3: Installing the Water Level Indicator

Put the water level indicator into its opening on the reservoir. As you fill the reservoir, the float rises to show the water level.



The coloured lines on the indicator show the water level:

Low: top up now. The pump must always be fully under water, so it never runs dry.

Normal: the right level for everyday use.

High: full. Do not fill above this line (where the reservoir starts to narrow).

The float is 3D printed, so its movement and reading can vary slightly from tower to tower.

Step 4: Installing the Growing Sections
Fit the sections one by one. Turn each one slightly back and forth as you push it down, so it seats on the ring gasket. Wetting the discharge nipple a little makes this easier.

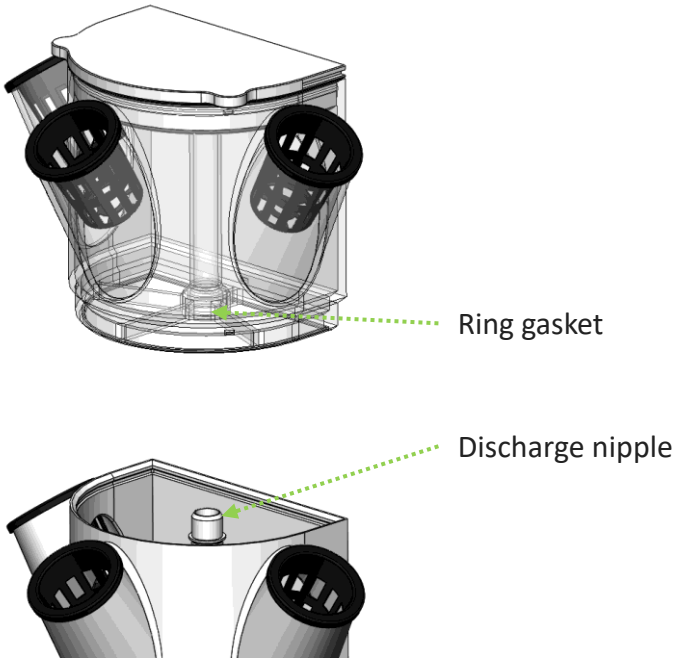

Step 5: Installing the Water Spreader and Tower Lid
1. Place the water spreader on the discharge tube, with its straight back edge lined up with the back of the section.
2. Press the tower lid down firmly to close it.
To add water or nutrients later, open the tower lid and pour them in.

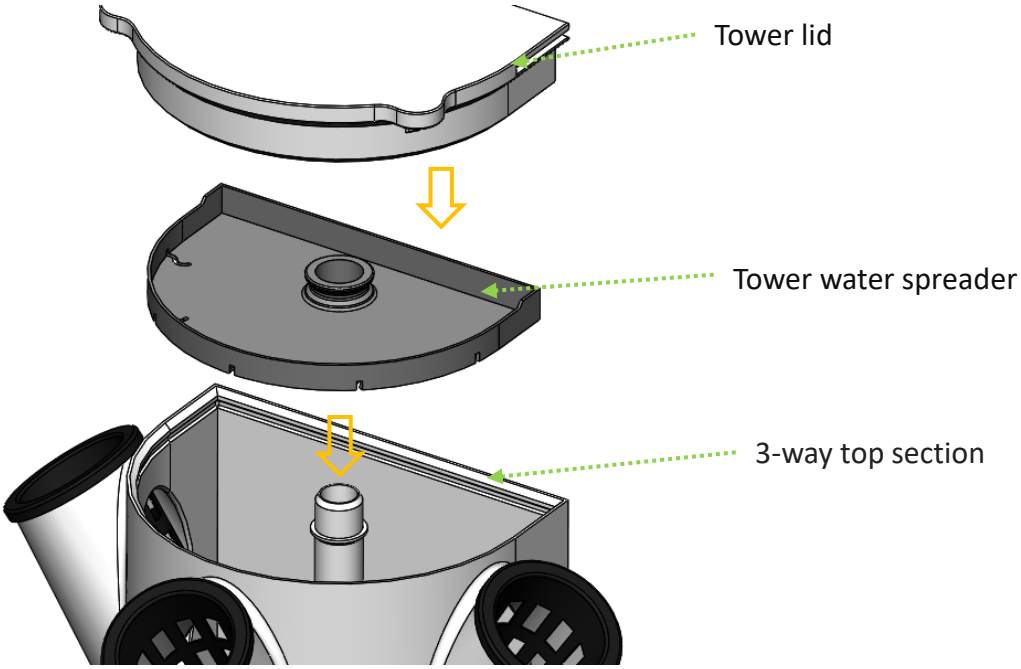

Step 6: Planting and Starting the Tower

1. Start seeds in peat plugs or rockwool cubes.
2. Put the plugs or seedlings into the net pots.
3. Place the net pots in the openings of the tower sections.
4. Fill the reservoir with water up to the high line on the water level indicator (Step 3).
5. Add hydroponic nutrients as directed by their maker (not included).
6. Plug the pump into a cycle timer or smart Wi-Fi plug (not included). See the timer settings on the next page.
7. Switch on and check that every net pot gets water and nothing leaks.

Care and Safety

1. Cleaning

- Wash all tower parts by hand. Do not use a dishwasher or water hotter than 65 °C (150 °F); heat can warp the plastic.
- Rinse well so no cleaning product is left before you reassemble.

2. Electrical safety

- Always unplug the pump and lights before maintenance or cleaning.
- Check cords and plugs regularly and replace them if damaged.

3. Pump and water

- Never run the pump dry: the pump must be under water at all times.
- Check the water level indicator every day and top up before it reaches the low line.
- Check the pump intake and the water spreader for clogs to prevent overflow or leaks.

4. Nutrient solution and roots

- Every 1 to 2 weeks, drain the old solution, clean the reservoir and refill with fresh solution.
- Check pH (ideal 5.5 to 6.5) and EC/TDS (depends on the plant) at least twice a week.
- Trim large root masses so they do not block the water flow.

5. Location

- Set the tower on a level surface; a tilted tower waters unevenly and can tip over.
- Give the plants plenty of light: a sunny window, or a grow light.
- Keep it where the temperature suits your plants (usually 18 to 27 °C / 65 to 80 °F), with good air flow to prevent mold.

6. Good habits

- Use hydroponic nutrients only, at the dose on the label; too much can burn roots and clog the spreader.
- Keep a simple log: date, pH, EC/TDS, solution changes, root trims and any problems.
- Once a month, check the tubing, gaskets, clamps and fittings for wear, and replace parts early.

Pump timer settings (starting points)

Where the tower is	Day / lights on	Night / lights off
Indoors, under a grow light or in a bright room	10 min on every hour	10 min every 4 to 6 hours
Sunny window or warm room	15 min on every hour	10 min every 4 hours
Seedlings and new plugs (first 2 weeks)	10 min on every 30 min	10 min every 4 hours

The growing medium must stay moist at all times. If it dries out between cycles, run the pump more often or longer; if it stays soaked or water drips from the openings, run it less. In full sun and heat, plants need much more water.

Use a timer that can switch on for a few minutes at a time, such as a cycle timer or a smart plug with schedules.

Step 7: Flexible Algae Covers (Optional)

After planting, place a flexible algae cover over each net pot. It keeps light off the growing medium, so algae cannot grow on it.

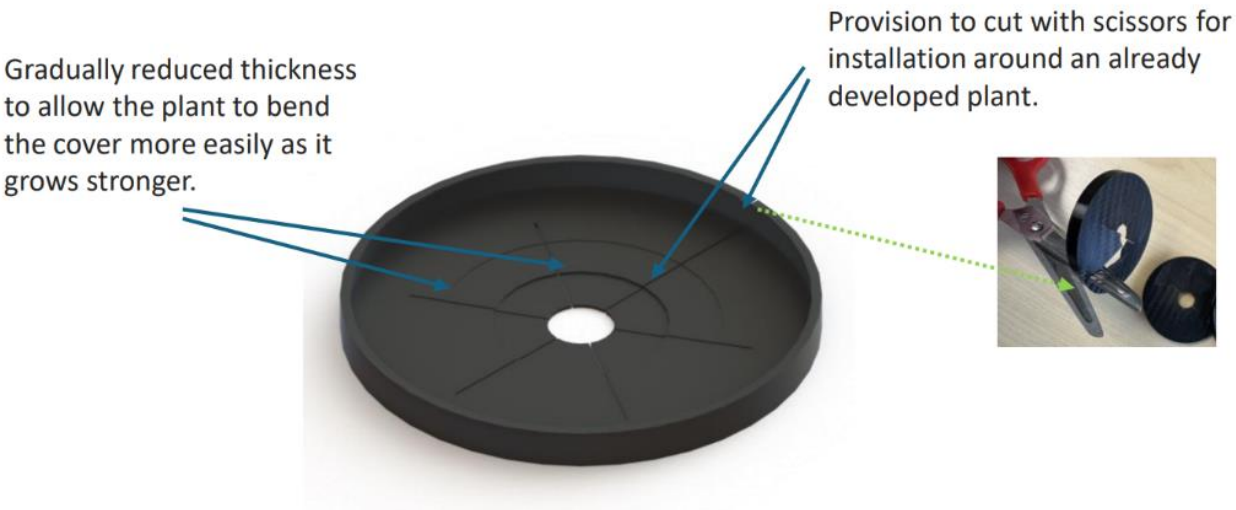

Made from soft TPU plastic (rubber-like) for easy installation.

Troubleshooting

Water leaks between sections

Check that each section is pushed fully down on its ring gasket. Wet the gasket a little and refit the section.

Water splashes out of the net pots, or the growing medium stays soaked

The flow is too strong. Turn down the pump's flow regulator, or fit the orifice insert in the push-in connector.

Some net pots get little or no water

Make sure the tower is level and the water spreader sits with its back edge lined up with the back of the section (Step 5).

The growing medium dries out between cycles

Run the pump more often or longer (see the timer table).

The pump runs, but no water reaches the top

Check the water level, and that the tube is still on the pump barb and the push-in connector. Clean the pump intake.

The water level indicator does not move

Lift it out, rinse it and put it back. The float can stick a little because it is 3D printed.

Green algae on the growing medium

Fit the flexible algae covers (Step 7), and keep the tower lid closed.

Limitation of Liability

Under no circumstances shall InnovoMAX be liable for indirect, incidental or consequential damages arising from the use of, or inability to use, this product.

Compliance and Permits

You are responsible for following local electrical, building and water-use codes, and for getting any permits needed before installation.

Enjoy your garden!

Questions, ideas or problems? Write to us at info@innovomax.com

We keep improving our products. Before you install the tower, scan the code to check you have the latest manual: